Chapter 8
Long Term Evolution (LTE)

Lecture Mobile Communication

Oliver P. Waldhorst

Outline

Wi-Fi, Bluetooth

GSM, UMTS, LTE, 5G

Mobility Management

Medium access

Wireless transmission

Introduction to LTE

4th Generation (4G) Cellular Network

- 4th generation of cellular networks: Long Term Evolution (LTE)

- Vision: Higher data rates by using larger channel bandwidth
  - Carrier channel bandwidth: In GSM 200 kHz, in UMTS 5 MHz
  - Problem of UMTS / CDMA
    - Bandwidth Requirements correlate with symbol rate
      → Use of higher bandwidth requires shorter symbols
    - Increases susceptibility to wireless interference such as multipath propagation
  - Solution: LTE relies on orthogonal frequency division multiplexing (OFDM)
    - Constant symbol (plus cyclic prefix) length per subcarrier
    - Higher bandwidth due to multiple (slow) subcarriers → high overall data rate
  - Maximum channel bandwidth in LTE 20 MHz

- Vision: Mobile network based entirely on Internet technologies
  - All LTE services packet-switched via Internet Protocol IP
    - Also voice (Voice over LTE, VoLTE), but in early installations fall back to circuit switching via GSM, UMTS (Circuit Switched (CS) Fallback)
  - IP to connect all network elements, including Ethernet via fiber optics or microwaves

3GPP LTE Releases

Release	Date	Contents
8	Q4 2008	Introduction of LTE
9	Q4 2009	LTE Extensions
10	Q1 2011	Introducing LTE Advanced
11	Q3 2012	LTE Advanced Extensions
12	March 2015	More LTE Advanced Extensions
13	March 2016	Extensions for growing throughput requirements
14	Mid-2017	Preparations for 5G standardization

LTE - Further development compared to UMTS

- New radio access network: Evolved-UTRAN (E-UTRAN)
  - Based on Orthogonal Frequency Division Multiplexing (OFDM)
  - Flexible carrier frequency bandwidth (1.4 - 20 MHz)
  - Advanced radio techniques (carrier aggregation, 4x4 MIMO, 256-QAM, ...)
  - No connection to the circuit switched domain (CSD) as with UTRAN

- New core network: Evolved Packet Core (EPC)
  - IP-based core network that can be accessed via different access networks (LTE, 3G, 2G, WLAN, WiMAX, HRPD, ...)
  - All services (including voice!) packet-based
  - Voice services use IP Multimedia Subsystem (IMS)

- Simplified Network Architecture: System Architecture Evolution (SAE)
  - Reduction of logical nodes → Flat architecture
  - Clear separation of user and control level

Duplexing and frequency ranges

- LTE standard specifies both Frequency Division Duplex (FDD) and Time Division Duplex (TDD) variants
  - Simultaneously and equally specified
  - Differences only on layers 1 and 2 → Reuse of hardware and software
  - FDD more common in Europe, TDD in North America and Asia

- LTE networks are operated in a wide variety of frequency bands
  - Dependent on frequency availability at geographical location
  - Frequent reuse of frequency ranges of other technologies
    - E.g. 10 MHz from 900 MHz GSM band, rest is sufficient for 2G voice calls and GPRS data
  - Assigned band numbers in [3GPP standard TS 36.101]

Frequency Bands

- Common frequency bands in Europe:

Band	Downlink (MHz)	Uplink (MHz)	Also used for
1	2110 – 2170	1920 – 1980	UMTS
3	1850 – 1880	1710 – 1785	GSM
7	2620 – 2690	2500 – 2570	
8	925 – 960	880 – 915	GSM, UMTS
20	791 – 821	832 – 862	
38	2570 – 2620	2570 – 2620	TD-LTE (Time Division Duplex)

- More complete overview e.g. in Wikipedia

[Sauter, M. (2018)]

LTE Overview and System Architecture

Overview LTE Architecture

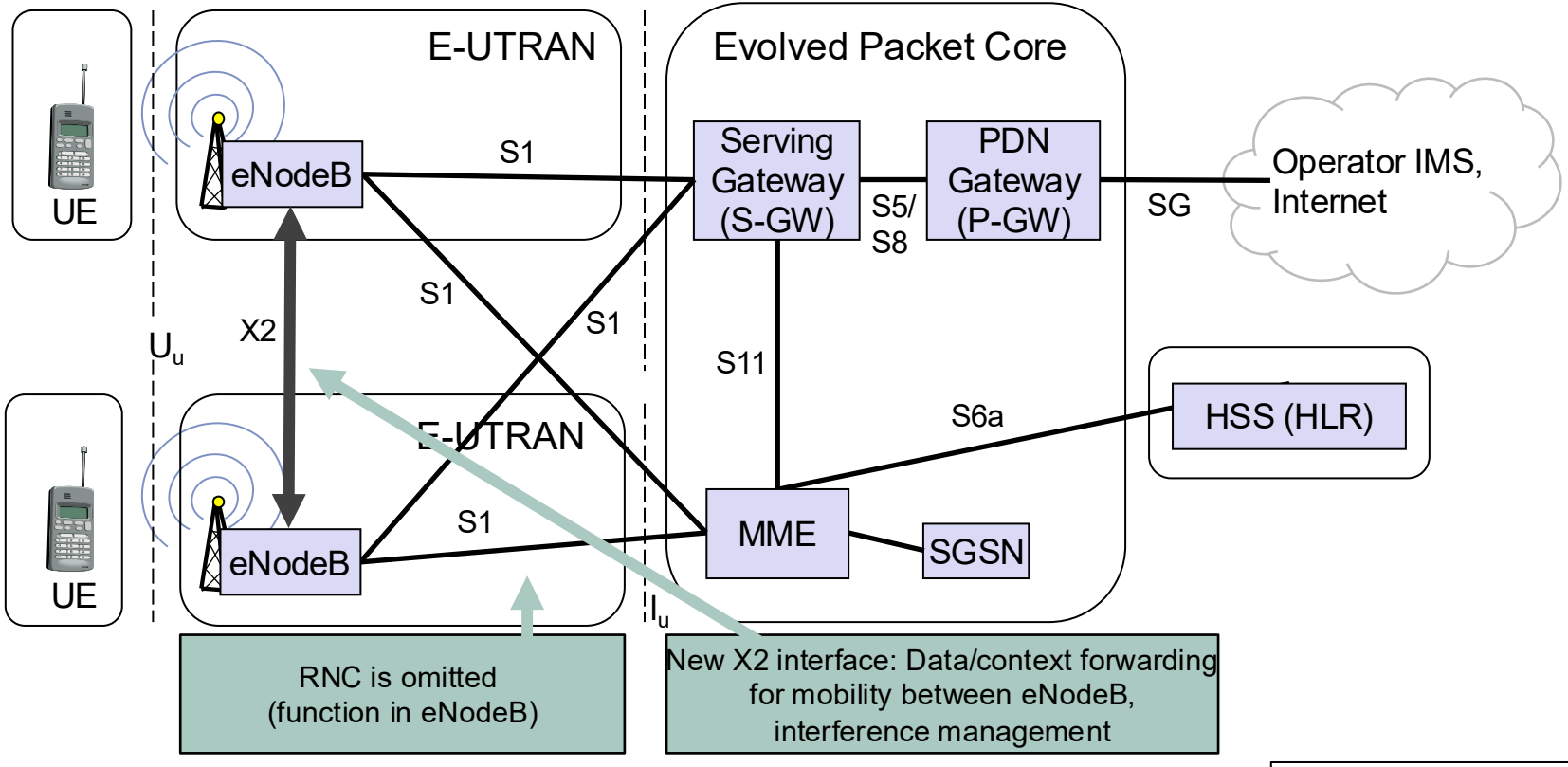

MME: Mobility Management Entity
HSS: Home Subscriber Server

Terminal Devices UE and Air Interface U_U (1)

- LTE standard refers to end devices as user equipment (UE)

- LTE specifies different terminal equipment categories (UE Categories)
  - Define maximum data rates for sending and receiving
  - 3GPP Release 8 specifies Categories 1-5
  - Later supplemented by other categories that separate between uplink and downlink
  - Category specifies only data rates, not precise technology (modulation methods, MIMO streams, ...)

- UE must support a variety of frequency bands and radio technologies
  - E.g. for high-end mobile phone for European market
    - More than 20 LTE frequency bands between 700 MHz and 2600 MHz (FDD and TDD)
    - GSM in the 900 MHz and 1800 MHz bands
    - UMTS in the 900 MHz and 2100 MHz band
    - GSM and UMTS roaming in the 850 MHz and 1900 MHz bands

→ Challenge for antennas and receivers

Examples of endpoint categories

Category	4	6	9	16 / 5	18 / 13
Max. downlink speed (Mbit/s)	150	300	450	1000	1200
Typical number of carriers in the downlink	1	2	3	4	4
Number of MIMO streams in the downlink	2	2	4	4	4
Max. modulation in downlink	64-QAM	64-QAM	64-QAM	256-QAM	256-QAM
Max. uplink speed (Mbps)	50	50	50	75	150
Typical number of carriers in the uplink	1	1	1	1	2
Max. modulation in the uplink	16-QAM	16-QAM	16-QAM	64-QAM	64-QAM

[Sauter, M. (2018)]

Base Station (eNodeB) (1)

- LTE standard refers to base stations as Evolved NodeB (eNodeB or eNB)
  - NodeB is based on the UMTS designation
- eNodeB Components
  - Antennas
  - Remote Radio Head (RRH): modulation, demodulation, signal amplification
  - Base Band Unit (BBU): signal & packet processing, digital interface to the core network
- Structure
  - Spatial separation between BBU in server rack and RRH close to antenna
  - Optical connection (Fronthaul) between radio module and digital module
  - Coaxial copper cable between radio module and antenna

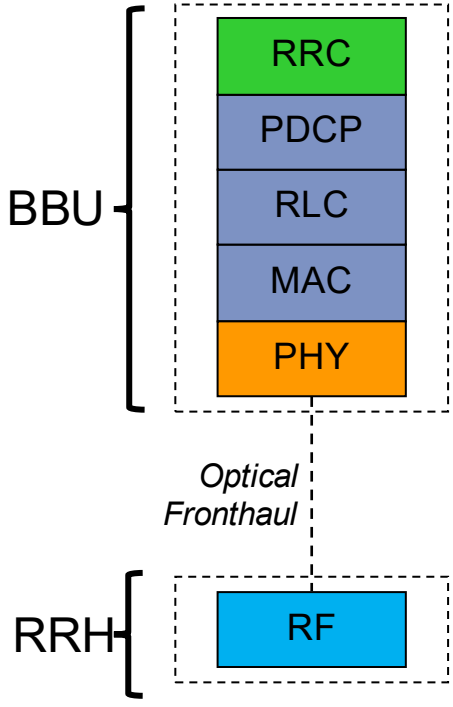

RRC: Radio Resource Control
PDCP: Packet Data Convergence Protocol
RLC: Radio Link Control
MAC: Medium Access Control
PHY: Physical Layer
RF: Radio Functions

Base Station (eNodeB) (2)

- eNodeB is an autonomous unit
  - In contrast, UMTS NodeB is only an "intelligent modem"

- Tasks of eNodeB:
  - User management, allocation of radio resources of the air interface to users
  - Ensure quality-of-service (QoS) attributes for individual connections
  - Mobility Management
  - Management of interference between neighboring eNodeB

S1 Interface

- S1 interface connects eNodeB with core network
  - Backhaul, usually fiber optic cables or microwaves
    - Protocols on layers 1 and 2 not defined in the standard
  - Possibly shared with GSM-BTS / UMTS NodeB in the same location
  - eNodeB with three sectors can achieve data rate in the range of Gbit/s
  - Logically divided into user plane (S1 User Plane, S1-UP) and control plane (S1 Control Plane, S1-CP)
- S1 Control Plane
  - Used for communication between eNodeB or UE and the core network
- S1 User Plane
  - Transmits IP datagrams from/to UE
  - Use of GPRS Tunneling Protocol / User Plane (GTP-U) for connection transfer without changing address in the payload packet
    - only the IP address of the outer datagram is changed

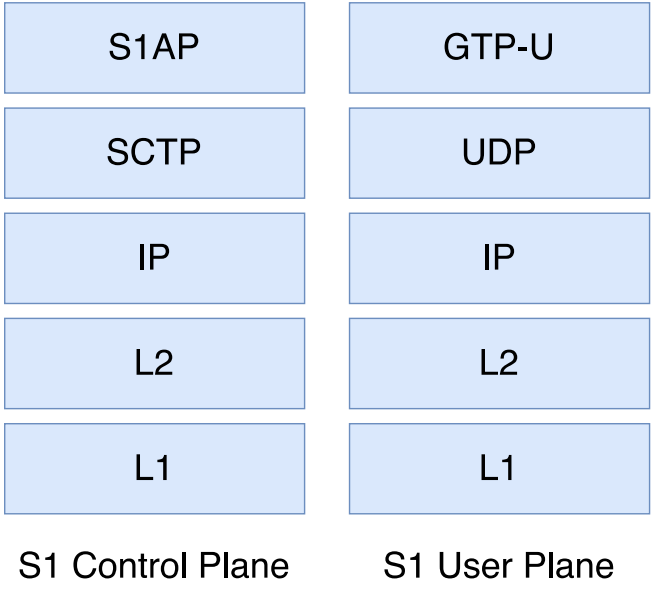

S1AP: S1 Application Protocol
SCTP: Stream Control Transmission Protocol [RFC 4960]
GTP-U: GPRS Tunneling Protocol for User Data

X2 Interface (1)

- eUTRAN has no central control entities (cf. GSM, BSC, UMTS, RNC)
  - Advantages: Lower latencies, load distribution
  - But: All functions must be provided by eNodeB, direct communication between eNodeB via X2 interface necessary
- Use X2 interface
  - Forwarding of data to handover if target cell can be reached via X2 interface
  - Automatic Neighbor Relation (ANR)
  - Minimization of interference between neighboring eNodeB
    - Since eNodeB is often hidden from each other, support from UE is necessary

X2 Interface (2)

- Realization of X2 interface
  - User level (X2 User Plane, X2-UP) and control plane (X2 Control Plane, X2-CP) similar to S1 interface
  - Logical: Direct connection between base stations

X2 Control Plane	X2 User Plane
X2AP	GTP-U
SCTP	UDP
IP	IP
L2	L2
L1	L1

X2AP: X2 Application Protocol
SCTP: Stream Control Transmission Protocol [RFC 4960]
GTP-U: GPRS Tunneling Protocol for User Data

- Physical implementation: Uses the same backhaul connections as the S1 interface
  - Aggregation router connects multiple eNodeB to core network
  - Routes X2 messages between eNodeB
  - Routes S1 messages to the core network

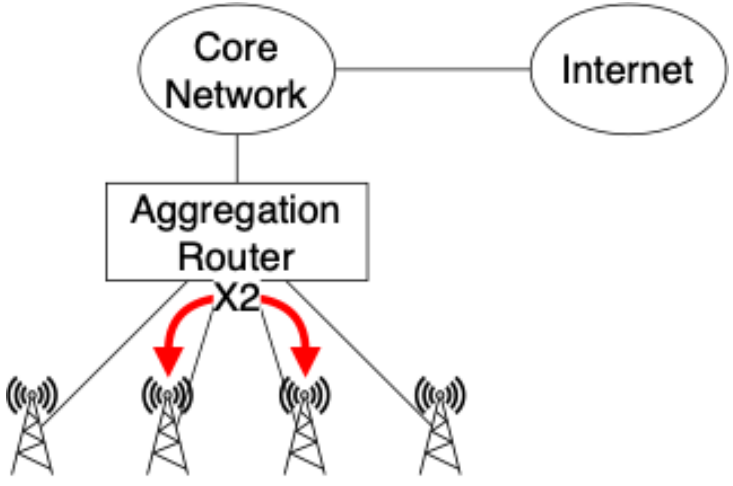

[Sauter, M. (2022)]

Mobility Management Entity (MME)

- Mobility Management Entity (MME) takes over administrative tasks similar to SGSN
  - But no data forwarding
  - Communication between eNodeB and MME is known as Non-Access Stratum (NAS) signaling

- Tasks of MME:
  - Authentication: eNodeB communicates with MME via S1 interface, MME obtains authentication information from HSS, enables encryption on air interface
  - Establishment of IP tunnels between eNodeB and gateway to external networks
  - NAS Mobility Management
    - For inactive UEs, tunnels are disabled and position is tracked only at the tracking area level
    - Paging is required for incoming packages
  - Handover support if no X2 interface between eNodeB
  - Cooperation with other mobile networks, e.g. GSM or UMTS

Home Subscriber Server (HSS)

- Common subscriber database for LTE, UMTS, GSM
  - In GSM/UMTS: Home Location Register (HLR)
    - Communication with MSC/SGSN via SS7 Mobile Application Part (MAP) protocol
  - In LTE: Home Subscriber Server (HSS)
    - Communication with MME via DIAMETER protocol [RFC 3588] and S6a interface
  - In practice, HLR and HSS are mostly identical for transition between mobile networks

Serving Gateway (S-GW) und PDN-Gateway (P-GW)

- Serving Gateway (S-GW) forwards user data
  - IP Tunnel to eNodeB and PDN Gateway
    - Terminates S1-UP GTP tunnel to eNodeB
    - Terminates S5-UP GTP tunnel to PDN gateway
  - Tunnels are independent, can be changed dynamically
    - Handover to new eNodeB with the same S-GW: Change only S1-UP tunnel
    - Change handover to new eNodeB with different S-GW: S1-UP and S5-UP tunnel
  - Tunnels are deprecated by MME over S11 interface
    - Leverages GTP-C over UDP

- Packet Data Network Gateway (PDN-Gateway, P-GW)
  - Connection to the Internet, opposite side of the S5 GTP-U tunnel
  - Assigns IP addresses
    - Requested after authentication by MME via S5-CP interface

Communication UE – eNodeB – P-GW

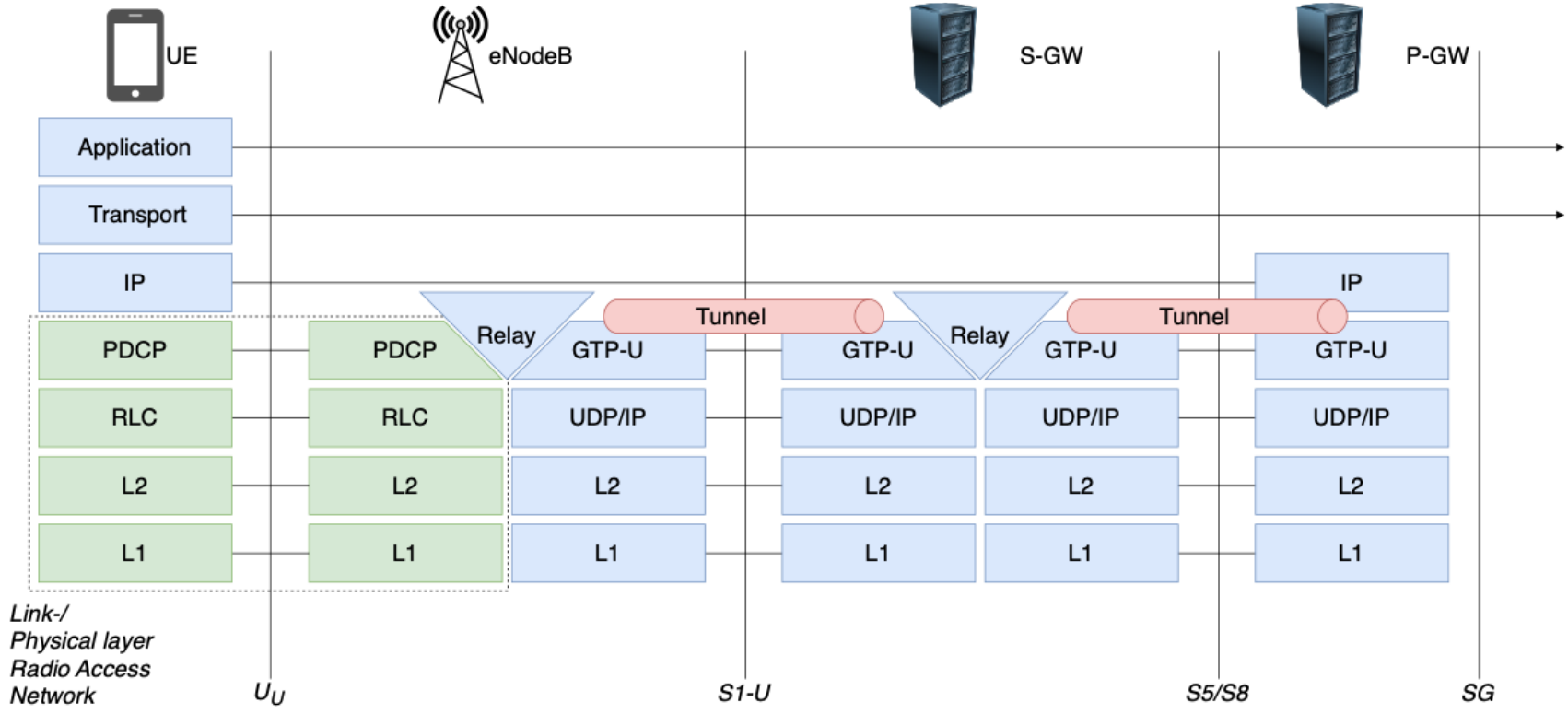

PDCP: Packet Data Convergence Protocol
RLC: Radio Link Control
GTP-U: GPRS Tunneling Protocol for User Data

L2: Link layer
L1: Physical layer

Source: https://gaia.cs.umass.edu/kurose_ross/ppt.php

Voice over LTE (VoLTE) und Voice over WIFI (VoWIFI)

- LTE completely disconnects voice telephony from the network
  - Contrast to GSM and UMTS!
  - Voice telephony is handled via Internet Protocol IP
    - Circuit-Switched (CS) Fallback Workaround
  - No MSC: Switching functions provided by 3GPP IP Multimedia Subsystem (IMS)
    - Based on Session Initiation Protocol (SIP, [RFC 3261])
  - IMS can be used for calls over LTE network and WIFI network (VoWIFI)

Wireless Transmission in LTE

LTE Air Interface U_U

- UMTS: CDMA not suitable for wider channels
  - Bandwidth dependent on symbol rate High bandwidth requires short symbols
  - Problematic e.g. in the case of multipath propagation due to intersymbol interference (ISI)

- Consequence: Change to OFDM
  - Robust against ISI and fading of individual frequencies
  - Reduced receiver complexity
  - Flexible scheduling by assigning subcarriers to different users (Orthogonal Frequency Division Multiple Access, OFDMA)
  - Scalable OFDM allows expansion to different transmission bandwidths (see below)

- Additional innovations
  - Modulation QPSK, 16-, 64- or 256-QAM
  - Integration of Multiple-Input-Multiple-Output (MIMO) techniques

Scalable OFDM for Different Carrier Bandwidths

- Subcarrier width remains fixed (15 KHz)
- Symbol time fixed at 66.667 µs and cyclic prefix at 4.7 µs (or 16.67 µs in difficult environments) regardless of bandwidth (1.4 MHz, 3 MHz, 5 MHz, 10 MHz, 15 MHz, 20 MHz)
- Number of subcarriers variable to operate in different bandwidths
- Influence of latency variance, Doppler effect due to mobility, timing accuracy, etc. remain the same when bandwidth changes -> Robust design

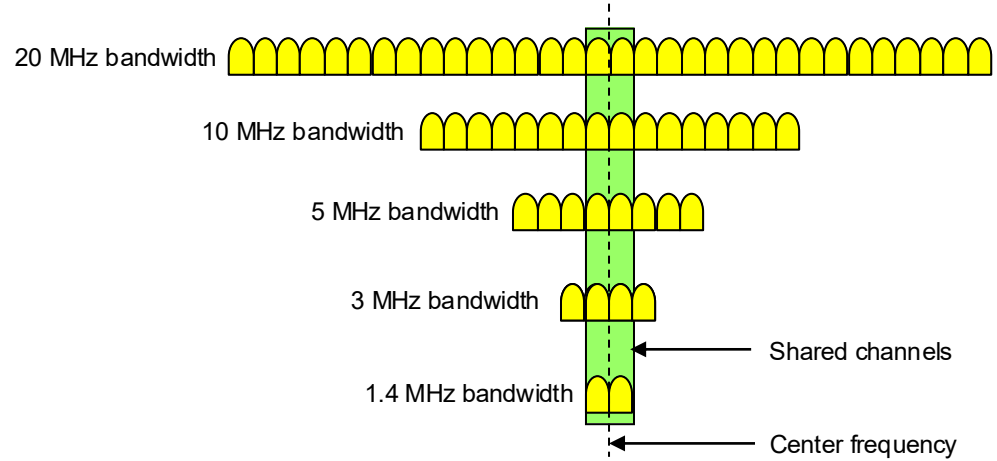

(schematic representation, number of subcarriers is different in reality, see below)

Downlink vs. Uplink

- Disadvantage OFDMA
  - Power difference between average and maximum transmission power (Peak to Average Power Ratio, PAPR) very large
  - However, the amplifier must support maximum transmission power
    → High energy consumption

- Consequence: Different methods in downlink and uplink
  - Downlink
    - OFDM implemented in eNodeB, unproblematic due to power supply
  - Uplink
    - Battery operated, therefore procedures with lower PAPR required

- Solution: Single Carrier Frequency Division Multiple Access (SC-FDMA)

Single Carrier FDMA (SC-FDMA)

- Additional Fast Fourier Transform (FFT)
  - Conversion of data stream to frequency vector
  - Each bit of data is evenly distributed across <u>all</u> subcarriers
  - Subcarriers not used by UE set to 0 for further processing
  - IFFT generates time-based signal from this as before
  - It can be shown that PAPR is significantly lower due to the additional (I)FFT stage.

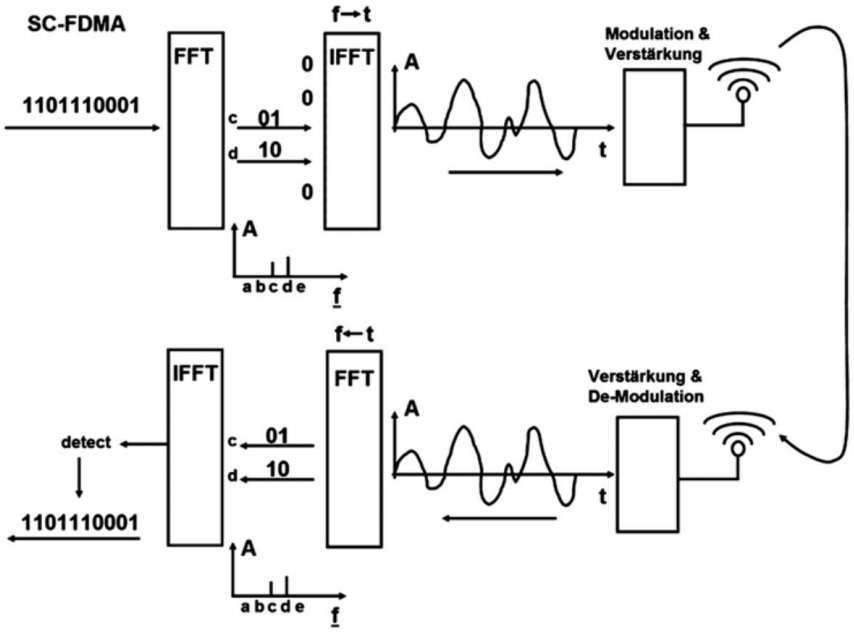

[Sauter, M. (2022)]

Medium Access in LTE

Multi-User Diversity: LTE Scheduling (1)

- Base unit for media access: Resource Block (RB)
  - 12 subcarriers in one frequency (= 180 kHz)
  - 1 time slot (= 0.5ms, = 7 OFDM symbol times)
    - Symbol ≙ Resource Element
  - RBs are usually distributed over several UEs, several RBs can be assigned to one UE

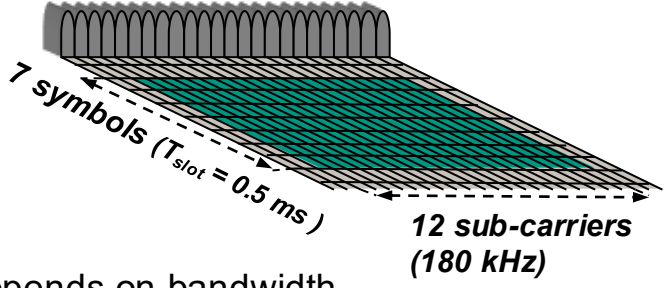

- Total number of available RBs depends on bandwidth

Bandwidth (MHz)	1.4	3.0	5.0	10.0	15.0	20.0
Number of available resource blocks	6	15	25	50	75	100

Multi-User Diversity: LTE Scheduling (2)

- Smallest allocation unit is subframe of two time slots
  - eNodeB decides every 1ms which UE send/receive data
- Options for resource block allocation
  - Contiguous in the frequency domain (Localized Virtual Resource Blocks, LVRB)
    - Needs detailed channel quality feedback for optimal placement
  - Distributed Virtual Resource Blocks (DVRBs)
    - Works without channel feedback
- Results in a Resource Grid

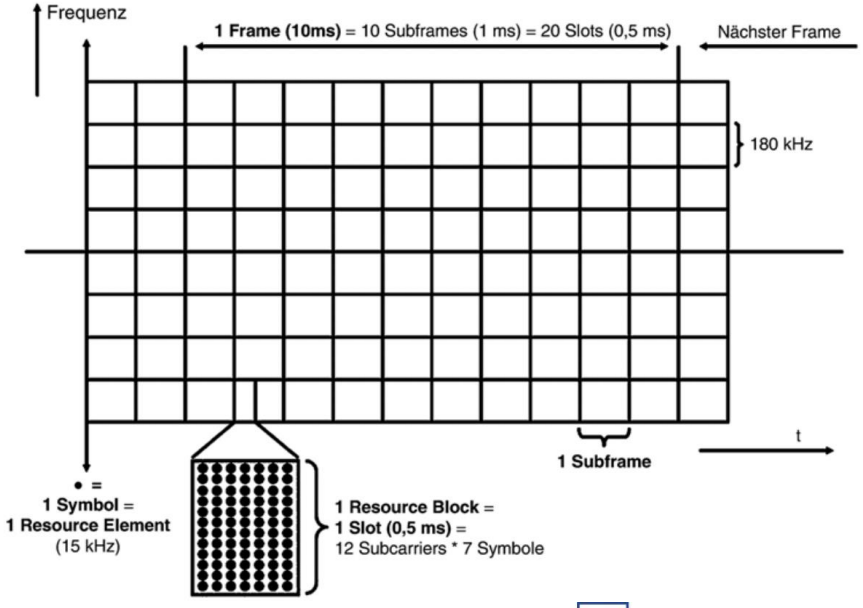

[Sauter, M. (2022)]

Frequency Reuse

- Scheduler can restrict which resource blocks can be used in which sectors
  - Reduced inter-cell interference leads to improved signal-to-noise ratio, especially at the edge of the cells
  - But: Reduction of available transmission bandwidth leads to poor spectral efficiency
- Users at the Cell Edge
  - eNodeB transmits with higher power
  - Improved S/N Rate
- Users in cell center use full frequency band
  - eNodeB transmits with lower power
  - Less interference with other cells

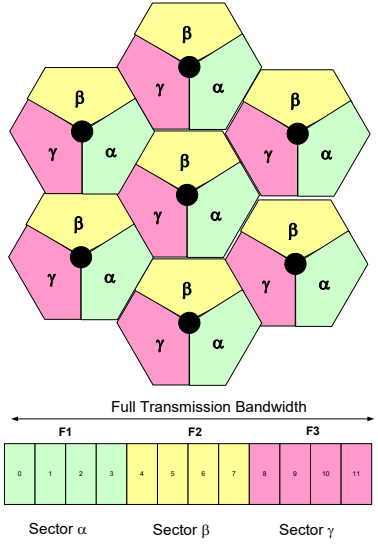

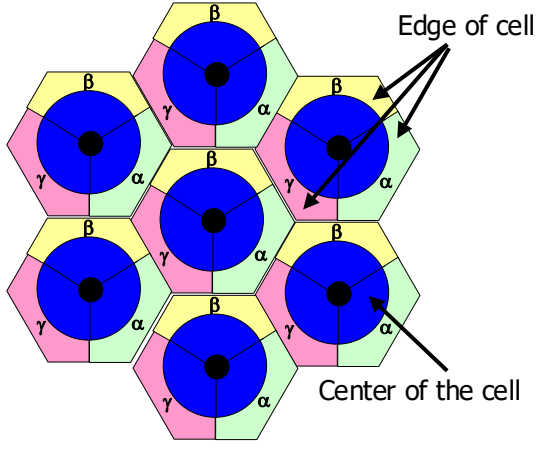

Reference and Synchronization Signals

- Not all symbols used for payloads
  - Position in the Resource Grid determines the purpose of a symbol

- Examples
  - Reference signals for network search and determination of channel quality
    - In every 7th symbol on the time axis / every 6th subcarrier on the frequency axis
    - Standard defines 504 different reference signal sequences (Physical Cell ID, PCI) to distinguish different eNodeB
  - Initial Synchronization
    - Primary- und Secondary Synchronization Signals (PSS / SSS)
    - In 1. and 6th subframe on 72 "inner" subcarriers of a frequency band, one symbol each

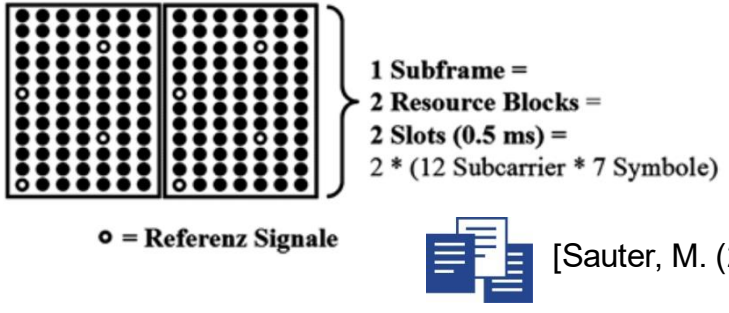

[Sauter, M. (2022)]

Bearer

- The logical connection between two network elements is called a bearer
  - Describes quality of service attributes (maximum delay, data rate)
  - Example: Radio Access Bearer (RAB) between UE and eNodeB
    - Assigned during link build-up
    - Includes Signaling Radio Bearer (SRB) for signaling
    - Includes at least one Data Radio Bearer (DRB) for IP payload packets
- Bearers are mapped to logical channels at the air interface

Logical channels in LTE

- Traffic channels
  - DTCH Dedicated Traffic Channel

} *Voice and data transmission*

- Control channels
  - BCCH Broadcast Control Channel
  - PCCH Paging Control Channel

} *Information from base station to all UEs*

  - CCCH Common Control Channel

} *Establishing a connection network -> UE*

  - DCCH Dedicated Control Channel

} *Signaling information for connection control and mobility management*

Mapping logical to physical channels

- Two-stage mapping via transport channels
  - Logical channels
    - Describe different information flows (user data or control information)
  - Transport channels
    - Prepare data packets from logical channels for transmission
    - Multiplexing
      - Data streams for different users
      - Different logical channels of the same user (e.g. DTCH and DCCH)
    - Determination of transmission parameters (e.g. packet size, checksum, error correction)
  - Physical Channels
    - Resource Blocks defined by scheduler

Downlink Channel Mapping

- Transport Channels

PCH	Paging Channel
BCH	Broadcast Channel
DL-SCH	Downlink Shared Channel

- Physical Channels

PBCH	Physical Broadcast Channel
PDSCH	Physical Downlink Shared Channel
PCFICH	Physical Control Format Indicator Channel
PDCCH	Physical Downlink Control Channel
PHICH	Physical HARQ Indicator Channel

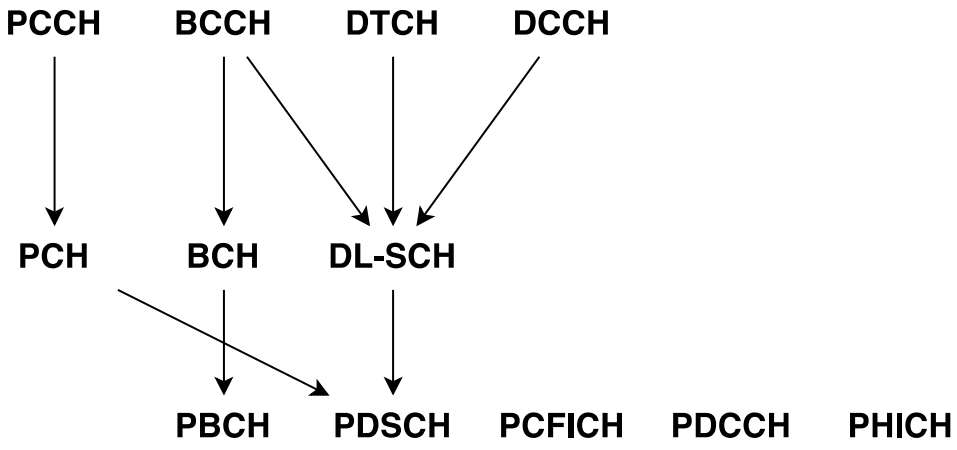

[Sauter, M. (2022)]

Uplink Channel Mapping

- Transport channels

UL-SCH Downlink Shared Channel
RACH Random Access Channel

- Physical Channels

PUSCH Physical Uplink Shared Channel
PRACH Physical Random Access Channel
PUCCH Physical Uplink Control Channel

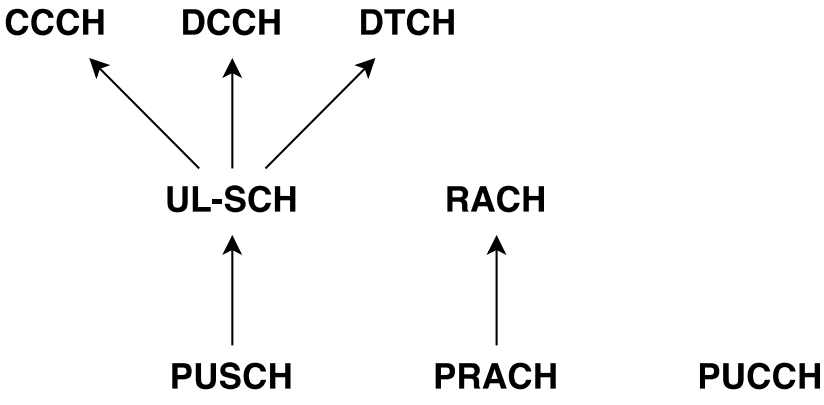

[Sauter, M. (2022)]

Retransmissions

- Transmission errors possible despite adaptive modulation and coding
  - Targeted: 10% defect rate to make full use of air interface capacity

- Low latency challenge
  - Detecting transmission errors as quickly as possible
  - Retransmit erroneous data as quickly as possible
  - Adjust modulation and encoding for a constant error rate

- Approach: Hybrid Automatic Repeat Request (HARQ) on MAC layer
  - Stop-and-Wait ARQ procedure: Next packet only after confirmation of the previous
  - Incremental Redundancy:
    - Additional redundancy bits are sent in case of decoding errors
    - Gain by reducing the code rate

Example: Incremental Redundancy

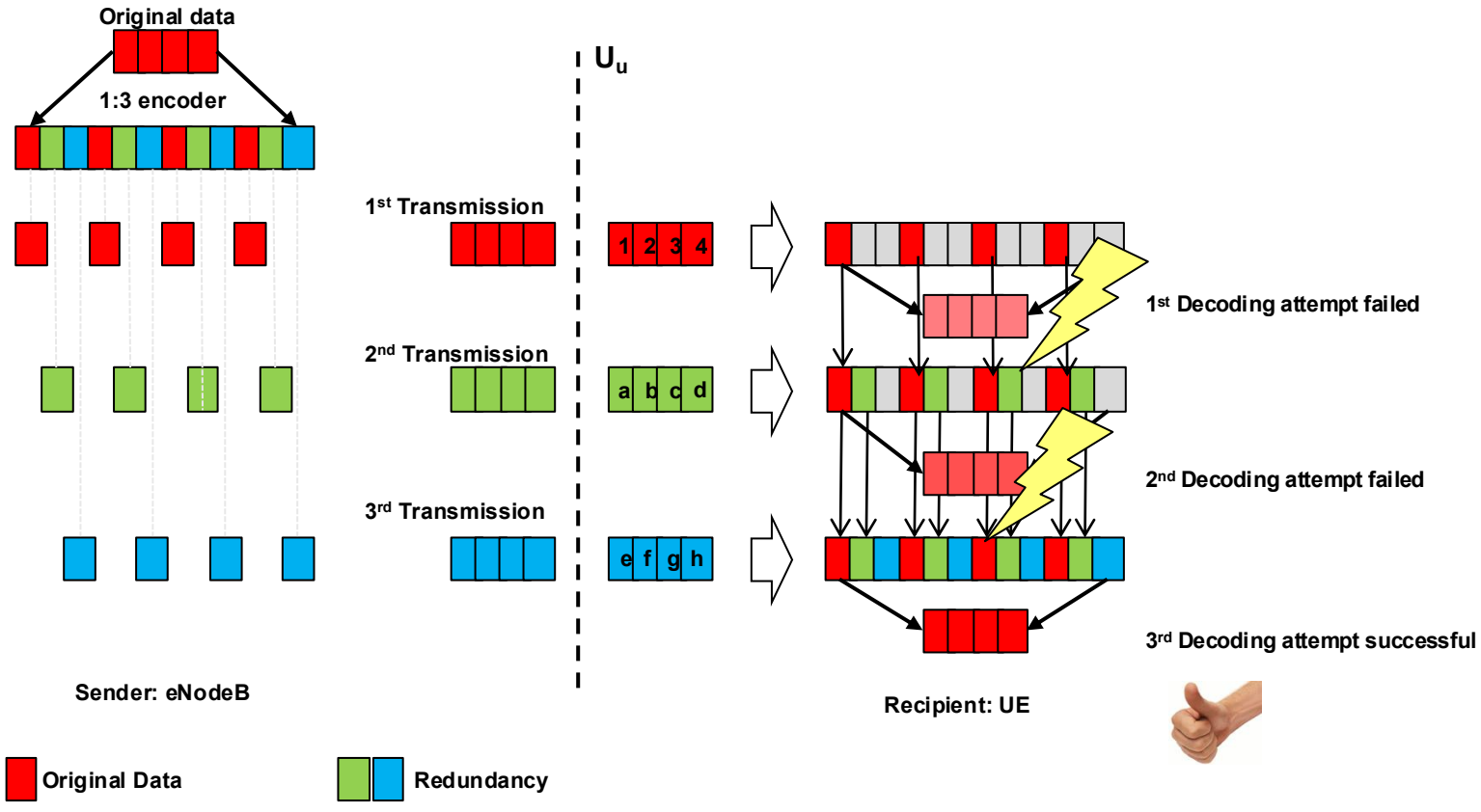

Downlink: Asynchronous HARQ

- eNodeB waits for ACK/NACK from UE
  - Sent on PUSCH or PUCCH (if no uplink resources allocated to UE)
- 4 subframes after data unit
  - Time required to decode and check
- ACK: Delete data from send buffer, next data unit
- NACK: Retransmit data unit if channel quality is ok (asynchronous)
  - Complete data block or
  - Incremental redundancy or
  - Different modulation/coding
- Max. number of retransmission configurable,
  - E.g. low for Voice over LTE (VoLTE) bearer

- Up to 8 parallel HARQ processes
  - Avoidance of "gaps" in data stream
  - Modulation, encoding, HARQ process number send on PDCCH

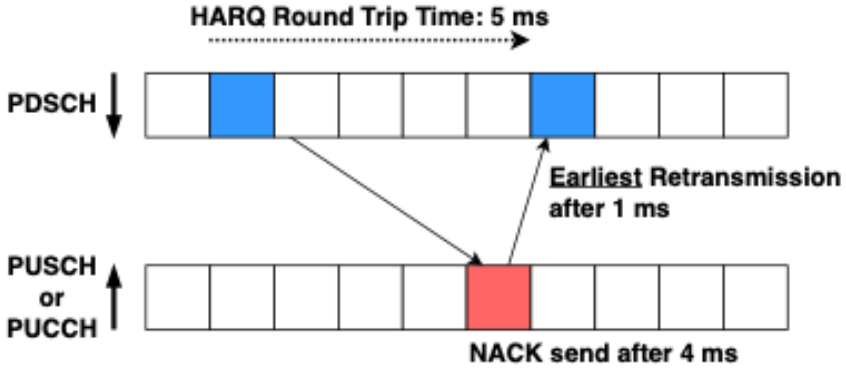

[Sauter, M. (2022)]

Uplink and Higher Layers

- Uplink: Synchronous HARQ
  - Retry in case of transmission error after a fixed time (4 subframes)
  - ACK/NACK sent on PHICH
  - Retransmissions
    - Transmission at new position in the resource grid with new modulation/encoding specified in the NACK or
    - Transfer at the same position in the resource grid at NACK without further requirements

- Automatic Repeat Request (ARQ) at Radio Link Control (RLC) Layer
  - Detects packet loss on MAC layer and initiates retransmissions
  - Not used for some connection types, e.g. VoLTE Bearer

RB Scheduling

- Central scheduling by eNodeB
  - Rapid response to changing conditions at the air interface, throughput optimization
  - Quality of Service Management per user
  - Control of overload situations

- Scheduling decisions
  - Prioritization via Quality of Service Requirements / Bearer
  - For same priority
    - Proportional Fair Scheduler takes channel quality into account
    - Balancing cell throughput and throughput per user

Downlink Scheduling (1)

- eNodeB assigns UE per subframe resource blocks via PDCCH
  - UE uses PCFICH to determine how many symbols are used for downlink assignment messages (control region)
  - UE listens to these slots
  - UE search for your own Scheduling Grants in Downlink Assignment message
    - Message checksum contains UE ID, thus assignment to UE possible

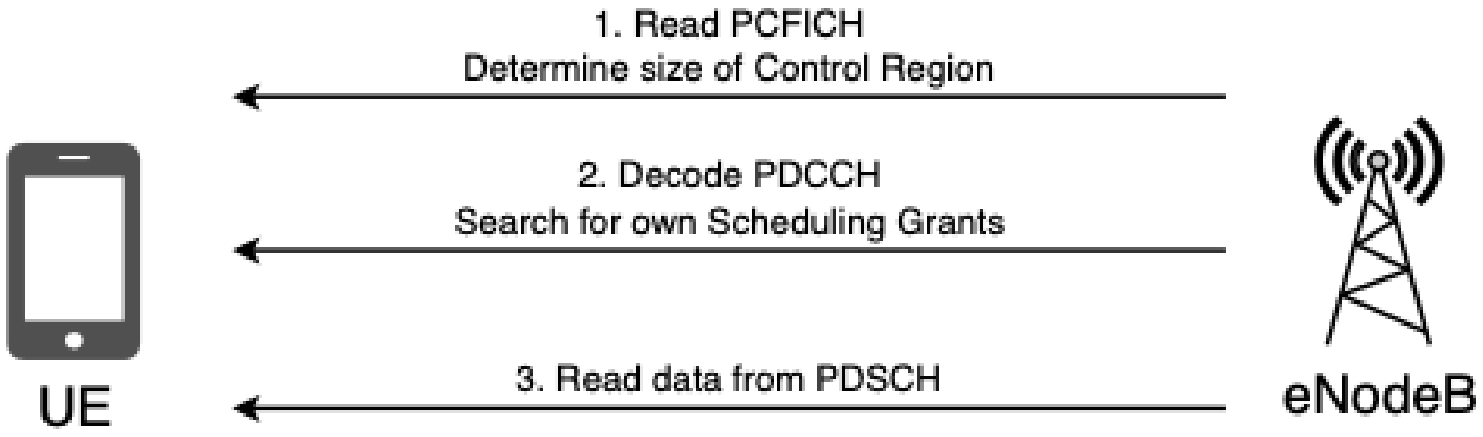

[Sauter, M. (2022)]

Downlink Scheduling (2)

- Scheduling Grant included in Downlink Assignment
  - Resource Block Assignment Type (see below)
  - Power Control Information
  - HARQ information (new data bit or redundant version)
  - Modulation and Coding Scheme
  - Number of MIMO Streams
  - Precoding information (i.e., how the data should be prepared for transmission)

- Types of Resource Block Assignments
  - Type 0: Allocation of groups of resource blocks via bitmap
    - Example 10 MHz channel: 50 RBs in groups of 3 RBs -> 17 bit bitmap
  - Type 1: Individual resource blocks per group via bitmap
  - Type 2: Start point on frequency axis and number of RBs

- Energy saving
  - Network can define Discontinuous Reception (DRX) times
  - Endpoint does not listen to resource assignments during this time

- For VoLTE semi-persistent scheduling
  - Short data bursts at regular intervals
  - In pauses in speech, Silence Description Information (SID) deactivates scheduling

Uplink Scheduling

- Problem: eNodeB needs to know that UE has data to send
  - UE sends Scheduling Requests
  - If necessary, a connection must be established via Random Access Procedure (see below)
    - Network then allocates resources to UL-SCH
  - UE sends buffer status report in header during active connection
    - If there is currently no data transfer, send scheduling requests via PUCCH

Mobility management in LTE

Joining a Network

- Task after turning on UE: Find and connect to network
  - If possible: Return to the last used cell (stored)
  - Otherwise complete network search

- Steps of network search

1. Search for signals on all bands
2. If signal is found, search for Primary Synchronization Signal (PSS) / Secondary Synchronization Signal (SSS) on "inner" 1.25 MHz of the channel
3. Decoding the Master Information Block (MIB) for Network Configuration
   - Sent every 40 ms on PCCH
4. Decoding System Information Block 1 (SIB-1)
   - Contains data about the cell, including: Tracking Area Code (TAC, equivalent to Location Area in GSM)
5. Decoding System Information Block 2 (SIB-2)
   - Contains configuration of channels within the cell

Establishing a connection / activating the default bearer (1)

- Goal from the user's point of view:
  Assignment of an IP address
- Important steps

1. Requesting USCH Resources via Random Access Procedure on RACH
2. Establishing a Radio Resource Control (RRC) connection for signaling messages to eNodeB and core network
   - Attach Request is forwarded to MME
   - Usually several MME, connection with the last used MME or selection by eNodeB
3. Mutual authentication of UE and network
   - Data is then integrity protected and optionally encrypted
4. Update of the position in the HSS
5. Query of skills of the UE
   - Among other things, LTE bands, GSM, UMTS, ...
6. Structure of the session
   - In particular, tunnels between S-GW and P-GW

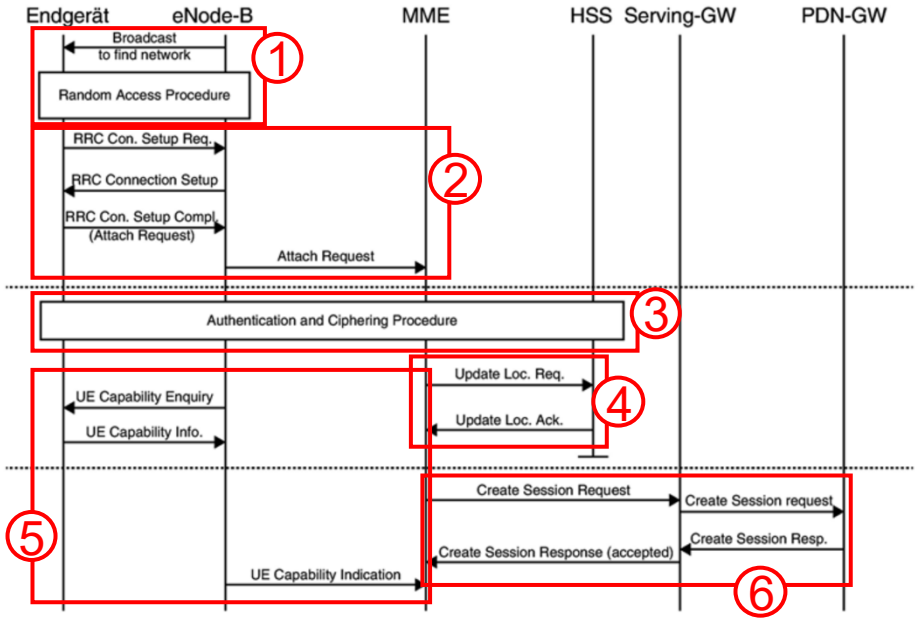

[Sauter, M. (2022)]

Establishing a connection / activating the default bearer (2)

- Continued

7. Start of construction of the tunnel between S-GW and eNodeB
   - Initial Context Setup Request contains Tunnel Endpoint ID (TEID)
8. Construction of bearers for IP packets on the air interface
   - The IP address and DNS configuration are given to UE
9. Completion of tunnel construction between S-GW and eNodeB
   - Additional configuration of measurements and reports for handover

- Complete procedure takes only fractions of a second!

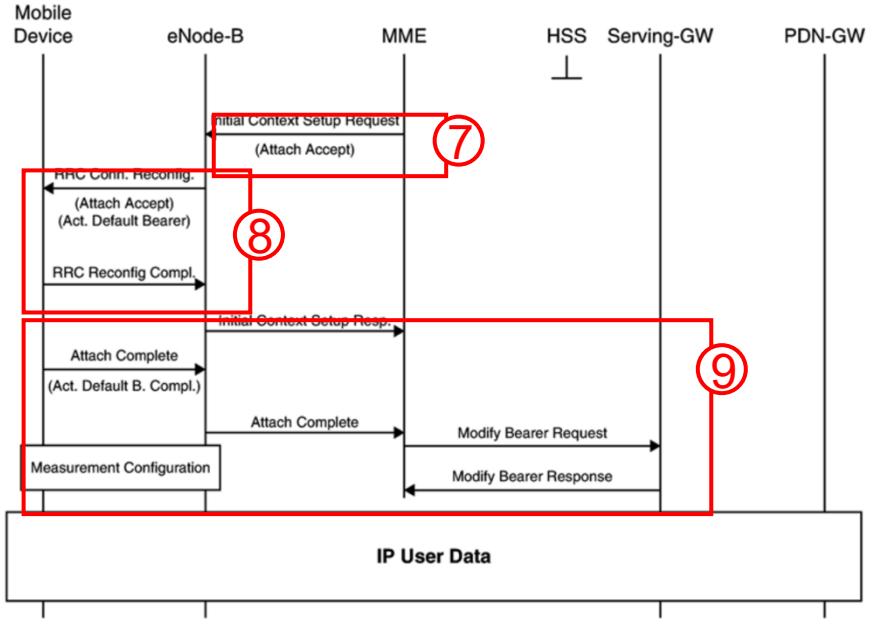

[Sauter, M. (2022)]

Handover Scenarios

- UE searches for neighboring cells
  - Depending on measurement and reporting configuration
  - Search from predefined signal strength
  - Report to eNodeB when above threshold
- eNodeB makes handover decision
  - Mobile Assisted Network Initiated Handover (see chapter Mobility Management)
- Types of handovers
  - Transfer between two eNodeB with connection via X2 interface
  - Transfer without X2 connection via MME and S1 interface

Example: X2 Handover

- Important steps

1. Handover after coordination between eNodeB
   - Sufficient resources at the new eNodeB
2. Requesting resources via RACH
   - Can be done through dedicated resources without competition
3. Transmission of user data immediately after handover
   - Uplink
     - Directly via new eNodeB to S-GW
   - Downlink
     - Via S-GW to old eNodeB
     - From there forwarding to new eNodeB
4. Tunnel will be adapted afterwards

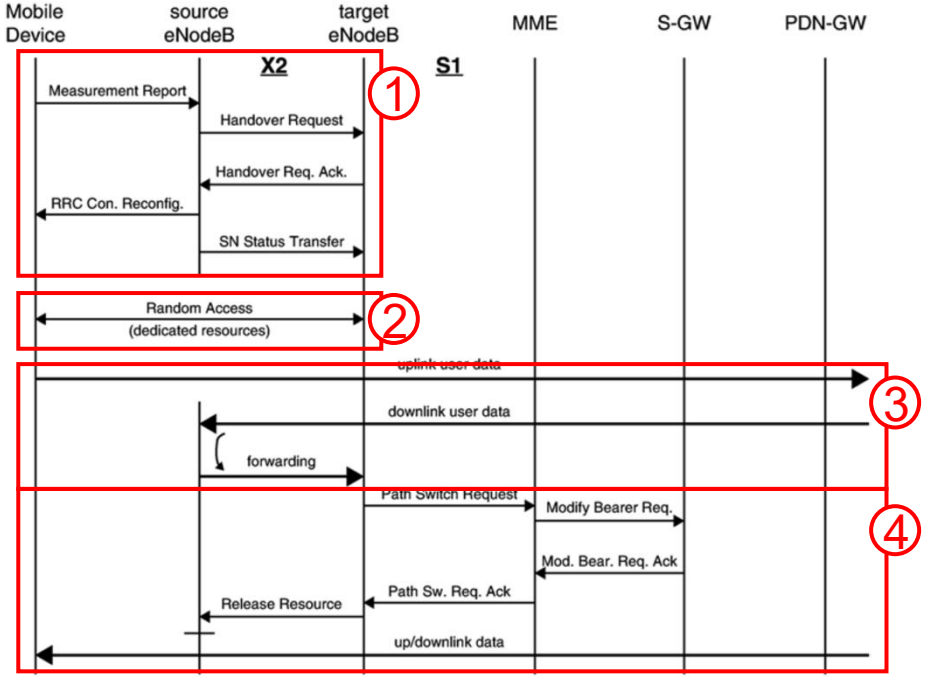

[Sauter, M. (2022)]

Behavior in the RRC Connected state

- State when default bearer is established is RRC Connected
  - UE synchronized with network
  - Send/receive payload data at any time
  - Tunnel eNodeB ↔ S-GW ↔ P-GW active
  - UE sends measurement reports periodically or when the limit value is reached
    - Can trigger handover decisions, see above
- UE in the RRC Connected state has high energy consumption
  - Search for downlink assignment messages on PDCCH in each subframe
  - Sending measurement reports
- Solution: Additional states with lower energy consumption
  - Less frequent search for downlink assignment messages (DRX, see below)
  - Sending measurement reports after time alignment time without payload

Discontinuous Reception (DRX)

- Inactivity Timer determines configuration for Discontinuous Reception (DRX)
  - UE configured for DRX searches less often for scheduling grants
    - Sending information on channel quality still necessary
  - Timer resets on each data packet
  - Optional period of short DRX cycles, after that switch to longer DRX cycles

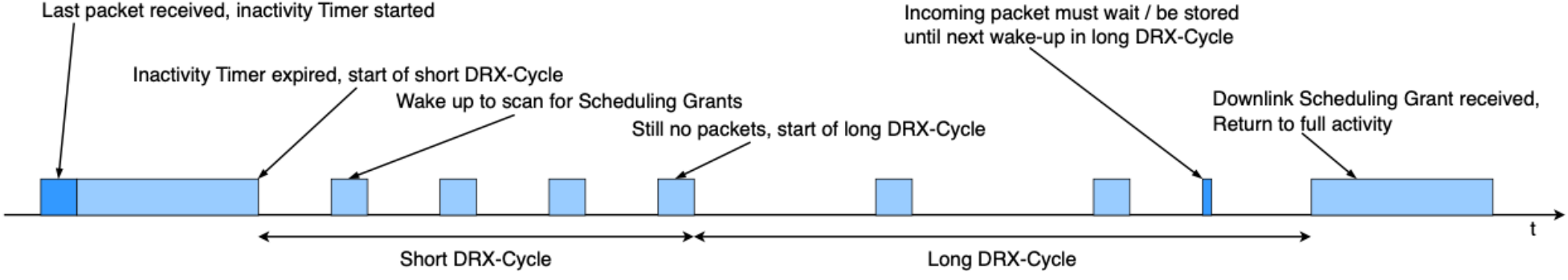

[Sauter, M. (2022)]

Mobility Management in RRC Idle State

- In case of extended inactivity: UE switches to RRC idle state
  - Device switches between cells independently
    - Network (MME) will only be contacted when changing the tracking area
  - No payload tunnel on S1 interface between S-GW and eNodeB
    - Tunnel between P-GW and S-GW incl. IP address preserved
    - Packets from the Internet can be forwarded to S-GW

- When packets arrive, MME must trigger reestablishment of S1 tunnel
  - Requires paging in all cells of the tracking area
  - Receiving unit of the UE is activated only at the end of paging interval (1 s to 2 s)
  - After receiving paging message: Random Access Procedure and Tunnel Setup

Summary of Activity States

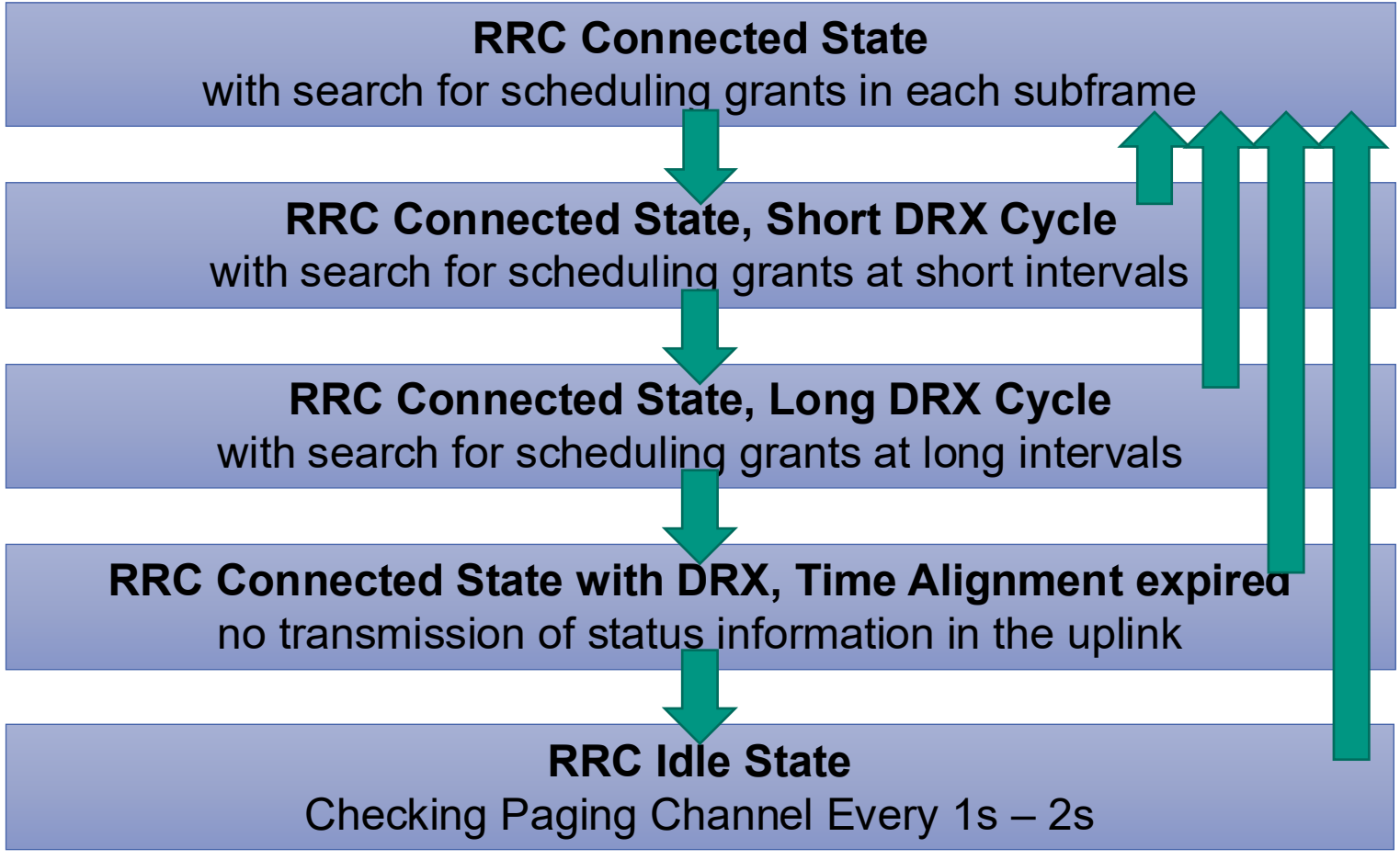

Mobility management in practice

- Configuration of "real" networks

	Network 1	Network 2	Network 3	Network 4
Time to DRX Activation	100 ms	200 ms	200 ms	-
DRX Short Cycle	80 ms	40 ms	-	-
DRX Long Cycle	200 ms	320 ms	80 ms	-
On Duration	10 ms	10 ms	4 ms	-
Time Alignment	10,2 s	∞	1,92 s	-
Time to RRC Idle	-	-	30 s	5 s

[Sauter, M. (2022)]

Summary LTE

- CDMA was replaced by OFDMA to scale to larger channel bandwidth
  - … and SC-FDMA in the uplink
- Flexible use of available bandwidth by adjusting the number of subcarriers
  - All communication IP-based, use of Internet technologies
- Consistent separation of user and control level
- Radio access network with "flat" architecture
  - All functions of base stations provided
- Flexible scheduling and frequency recycling
- Packet Retransmissions: Hybrid ARQ with Incremental Redundancy
- "Energy saving states" in case of inactivity, possibly with a long reactivation time

Exercises - LTE

- 8.1 Explain the functions of the components of the LTE architecture.
- 8.2 What multiplexing methods are used in LTE? How does this avoid inter-cell, intra-cell and inter-symbol interference?
- 8.3 How is LTE achieved on carrier frequencies with a wide range of bandwidths?
- 8.4 How is cell planning facilitated in LTE?
- 8.5 Compare scheduling in HSDPA with scheduling in LTE.
- 8.6 Which approaches known from the chapter Mobility Management are used in LTE? Where will you be deployed?
- 8.7 How can inactive mobile stations save energy?